# Thermo Scientific Prima BT Bench Top Mass Spectrometer

Highly precise multiport magnetic sector mass spectrometer

The Themo Scientific™ Prima™ BT Bench Top Mass Spectrometer is a highly reliable, precise and flexible gas analyzer specifically designed for process development laboratories.

- Scanning Magnetic-sector Technology
- 16-port Rapid Multistream Sampler (RMS)
- 6-port Automated Calibration Manifold
- Highest Available Analytical Precision, Accuracy and Stability

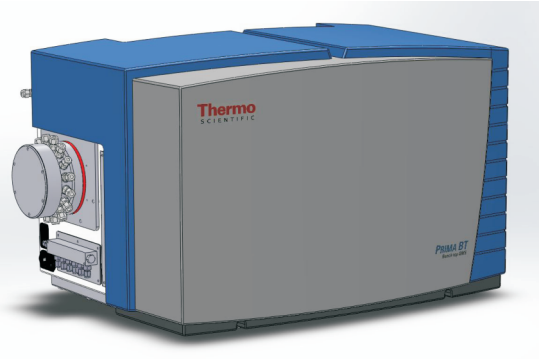


## Introduction

The Prima BT is a high performance gas analyzer based on a powerful and flexible scanning magnetic-sector mass spectrometer. The system has been designed to deliver superior analytical performance with high reliability and minimum maintenance. Apart from a floor mounting rotary pump, the instrument is contained within a fan-cooled enclosure suitable for mounting on a bench-top

## Operating Principles

The sample gas is introduced via a stream selector and a pressure reduction system comprising a capillary and molecular leak to introduce sample gas into the ion source under vacuum. Via the capillary a small flow of sample gas is drawn past the molecular leak by a vacuum pump. A small proportion of the sample gas enters the ion source. Using an electron emitting filament, the ionization chamber converts the sample molecules into ions which are positively charged molecules or parts of molecules. These ions are then separated according to their mass by a variable magnetic field. The different mass ions are then quantified by the detector in accordance with the abundance of the signals at these masses.

## Analytical Platform

At the heart of the Prima BT is a magnetic sector analyzer which offers unrivalled precision and accuracy. Thermo Fisher Scientific manufactures both quadrupole and magnetic sector mass spectrometers. Three decades of industrial experience has shown that magnetic sector based analyzers offer the best performance for industrial on line gas analysis. Key advantages of magnetic sector analyzers include improved precision, accuracy, long intervals between calibrations and resistance to contamination. The flat-topped peak profile ensures that the gas composition measurements are highly reproducible and the laminated magnet enables high scanning speeds.

This is a high-energy (1000 eV) analyzer that offers extremely rugged performance in the presence of gases and vapors that have the potential for contaminating the internal vacuum components. As the ions are extracted from the ion source at high energy, excellent stability is achieved for low molecular weight compounds such as hydrogen and helium.

Thermo SCIENTIFIC

## Inlet System Options

Available options include stepper motor controlled Rapid, Multi-stream Sampling (RMS), single point solenoid inlet and single point continuous inlet.

The unique RMS sample selection system sets new standards for multi-stream sampling, offering an unmatched combination of sampling speed and reliability, which allow selection of the gas sample from 1 of 16 streams. Stream settling times are application dependent and completely user configurable. The RMS includes digital sample flow recording for every selected stream. This can be used to trigger an alarm in case of fall off in sample flow, for example due to a blocked filter in the sample conditioning system.

This unit includes inlet control electronics, which provides electronic control of the stepper motor, calibration panel and RMS temperature (up to 80 deg. C). The position of the stream selector is optically encoded for reliable, computer controlled stream selection. The temperature and position control signals are communicated via the internal industrial network.

## Calibration Panel Option

For automatic calibration a calibration panel assembly with 6 solenoid valves is used to select calibration gases. This option is available when the RMS or single point solenoid inlets are selected.

## Electronics

Power supply and distribution has been engineered to ensure minimum power consumption and maximum reliability with extensive system monitoring at all points around the network. The principles of fault-tolerant design have been implemented throughout.

The local processor provides embedded processing power for true, stand-alone control of all mass spectrometer functions. A local network provides control of all ancillary equipment. A serial port is provided for connection to a PC and an additional two configurable serial ports are provided for remote communication. As standard OPC and Modbus protocol communications are provided.

## The Vacuum System

Includes the external floor mounting rotary pump that provides backing vacuum for evacuating the analyzer and also provides pumping for the inlet bypass capillary, the pump controller which controls the operation of the high-performance combination turbomolecular pump and an active cold-cathode vacuum gauge for interlock protection of the ion source filaments. As an option the external floor mounting rotary pump is replaced by an internal diaphragm pump which fits within the instrument enclosure.

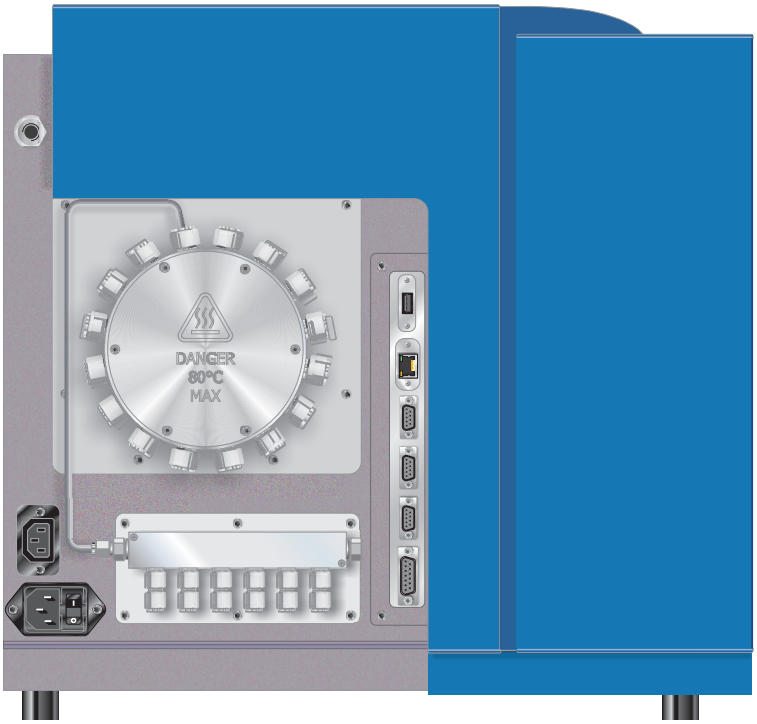


**System Configured for 15 Sample Streams and 6 Calibration Streams**

## Gas*Works* Software

Gas*Works* has been designed to ensure that the Thermo Scientific gas analysis mass spectrometers can be easily configured, operated and maintained without specialist knowledge of mass spectrometry. The system is based on our extensive experience of the needs of process users and, as such, includes industry standard communication protocols, multilevel security, event logging, automatic calibration and tuning, diagnostics and on-line help. The software suite also benefits from an extensive array of data presentation forms that can be configured to meet the needs of a variety of control-room or laboratory situations. This document provides only a brief overview of what can only be described as the most comprehensive software package provided by any analyzer manufacturer in the world.

## System Architecture

GasWorks is a two-processor system. The primary machine is the control engine built into the instrument. It provides a fully multitasking 32-bit real time industrial control system which manages all aspects of instrument control. It contains a database of all instrument configuration and operational details and retains this through power fail thus allowing restart without user intervention. Since this database contains all data needed for instrument operation, the analyzer can be configured and then left to run through its scheduled processes with no further intervention, simply sending its results to the DCS and calibrating itself when necessary.

The instrument controller needs no installation since its program is burned-in and its data is loaded from the host GasWorks machine.

The host GasWorks machine is a PC operating under Microsoft Windows XP, Vista or 7. It provides a convenient graphical user interface for configuring analysis methods, derived value calculations, calibration routines, communication protocols, I/O, alarm levels, etc. The host GasWorks machine also provides real-time analysis numeric and trend displays, together with various mass spectral scan modes, data logging in csv spreadsheet format and DDE for presentation of the data over a network. Also provided are comprehensive data review programs for numeric and trend displays and statistical calculations of stored data.

The primary machine can operate in stand-alone mode: i.e. analyze, auto-calibrate and provide data without connection of the host Gas*Works* machine. All generated data can by sent directly to a DCS, SCADA or LIMS without being routed through the PC.

## 16-Port RMS

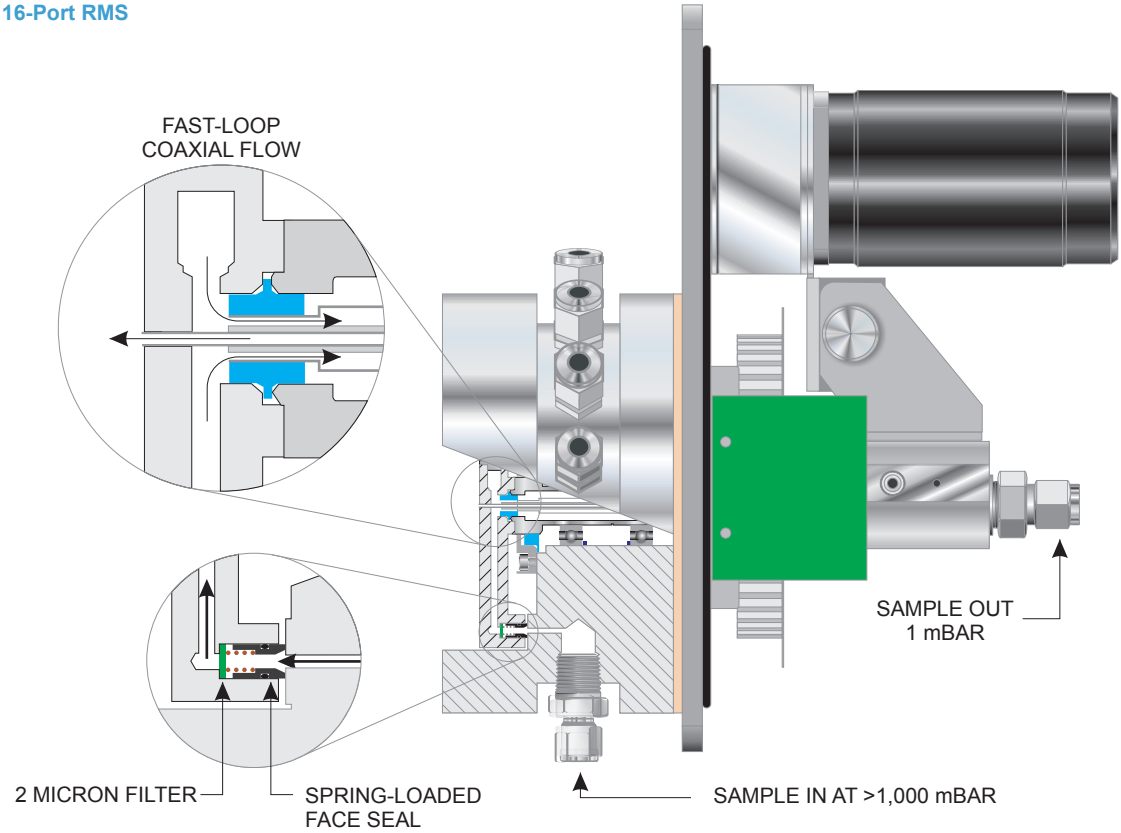


## Accuracy Considerations

It is often the case, that the peaks being measured are 'overlapped' or composite with contributions from more than one component. A de-convoluting data reduction technique is involved in deducing the component contributions to the peaks. On the Prima BT this is performed automatically by an embedded processor in the mass spectrometer. An important assumption is made (and is generally obeyed) that the overlapping peaks, when combined, obey the principle of linear peak superposition. The principle states that the composite peak height at a particular mass is simply equal to the sum of the peak heights which correspond linearly to the individual concentrations of the contributing components in the complex mixture.

The effect of overlapping peaks will necessarily influence the accuracy of measurement in the event that minor components in the sample gas are heavily overlapped by much larger concentrations. The Applications Group at Thermo Fisher Scientific will provide a detailed performance guarantee (to be included in any quotation) on submission of a customer stream specification. The most appropriate analytical method and calibration scheme will also be defined for each of the sample streams to be measured.

| Component | Concentration %mol | Standard Deviation of Prima BT Equal to or Better Than |
|---|---|---|
| Nitrogen | Balance | 0.005%mol |
| Oxygen | 15 | 0.005%mol |
| Argon | 1 | 0.001%mol |
| Carbon dioxide | 10 | 0.005%mol |

## Prima PRO or Prima BT?

The Thermo Scientific **Prima BT** is intended for use in process development labs where gas component concentrations in the range 20ppm - 100% require precise measurement. Additional low parts per million (ppm) concentrations can be added to the analysis by use of the optional multiplier detector.

The **Prima PRO** is intended specifically for use as an on-line analyzer and can be configured to operate reliably in almost any type of industrial environment. The Prima BT uses exactly the same mass spectrometer as the Prima PRO but it isn't configurable for industrial operation and gives the best performance when operated in a general-pupose, temperature-controlled environment. If you are looking for an online process gas analyzer then the Prima PRO provides the best available measurement quality. If on the other hand, you require an analyzer that will provide similar performance characteristics for up to 15 sample ports, but will be operated in your process development laboratory, then the Prima BT should fit the bill perfectly.

## World Class Service Support

Thermo Fisher Scientific service and support options are designed to ensure instrument optimization and reduce downtime. Because every customer and every instrument has different requirements, we offer a variety of services to meet your unique needs.

- Service Agreements
- Technical Support
- Spare Parts
- Field Installation and Service
- Product Training
- Comprehensive Service Kits

The latter includes all the components and tools necessary to complete the routine maintenance. The kit has been designed to accommodate significantly simplified maintenance procedures. For example, rather than changing filaments or cleaning the source, users now simply change the entire source, replacing it with the fully tested spare. The service kit can then be returned to the service depot for refurbishment.

**Thermo Scientific Prima BT**

| | |
|---|---|
| Ion Source | Enclosed Electron Impact with Dual Filaments, temperature controlled (settable over range 120-200 degrees C, to ± 0.1 degrees C) |
| Analyzer Type | Scanning Laminated Electromagnet, 6 cm radius, 80 degrees deflection |
| Mass Range | Adjustable, default is 1-150 amu at 1000 eV ion acceleration voltage, (at 750 eV ion acceleration voltage, mass range is 1-200 amu) |
| Resolution | Switchable between two collector resolving slits, resolving powers of 60 (1mm) and 20 (4 mm) are standard. Optionally 140/85 (0.36 mm/0.69 mm) or 100/45 (0.56 mm/1.45 mm) or 140/45 (0.36 mm/1.45 mm) may be fitted |
| Mass Scale Stability | Measured at mass 28 < 0.013 amu over 24 hours |
| Peak Shape | At 60 resolution, the ratio of the width of the flat-top (99% height width) to the base peak width (5% height width) 0.5 |
| Detector | Faraday and optional Faraday/SEM dual detector |
| Inlet Type | Capillary with Molecular leak and bypass (standard configuration) |
| Vacuum System | Turbomolecular Pump and external Rotary Pump<br>Alternatively Turbomolecular Pump and internal diaphragm pump |
| Sample Flow | Digitally measured and recorded for each stream for any instrument with RMS option |
| Precision | <0.1% relative (typical, application dependent) external rotary pump |
| Linearity | <1% rel over decade change in concentration (typical, application dependent) |
| Dynamic Range | 10 ppb – 100% (theoretical, application dependent) external rotary pump |
| Stability | <1% relative over 1 week (typical, application dependent) |

**For more information, visit our website at thermoscientific.com/process**

© 2013 Thermo Fisher Scientific Inc. All rights reserved. All trademarks are the property of Thermo Fisher Scientific Inc. and its subsidiaries. Specifications, terms and pricing are subject to change. Not all products are available in all countries. Please consult your local sales representative for details.

This product is manufactured in a plant whose quality management system is ISO 9001 certified.

**USA**
1410 Gillingham Lane
Sugar Land, TX 77478
Ph: (800) 437-7979
Fax: (713) 272-4573
sales.process.us@thermofisher.com

**United Kingdom**
Ion Path Road Three
Winsford, Cheshire CW7 3GA
Ph: +44 (0) 1606 548700
Fax: +44 (0) 1606 548701
email@thermofisher.com

**China**
+Units 702-715, 7th Floor
Tower West, Yonghe
Beijing, China 100007
+86 10 84193588
info.eid.china@thermofisher.com

Thermo SCIENTIFIC
Part of Thermo Fisher Scientific